USN | | | | | | | | | | |

RV COLLEGE OF ENGINEERING®

(An Autonomous Institution affiliated to VTU)

III Semester B. E. Examinations March-2021

Electronics and Communication Engineering

ANALOG MICROELECTRONIC CIRCUITS

Time: 03 Hours ***Maximum Marks: 100***

Instructions to candidates:

1. Answer all questions from Part A. Part A questions should be answered in first three pages of the answer book only.
2. Answer FIVE full questions from Part B. In Part B question number 2, 7 and 8 are compulsory. Answer any one full question from 3 and 4 & one full question from 5 and 6.

PART-A

1	1.1	Determine the region of operation for the MOSFET shown in Fig. 1.1. Assume $V_{tp} = -0.4V$. 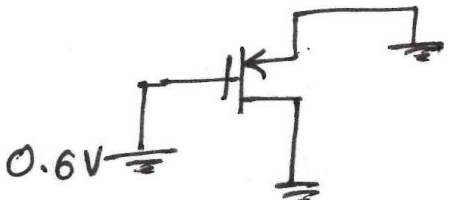 Fig. 1.1	01
	1.2	A MOSFET is biased at a drain current of 0.5mA. If $\mu_n C_{ox}$=100$\mu A/V^2$, $\frac{W}{L} = 10$ and λ= 0.1V^{-1}, then its intrinsic gain is _____.	02
	1.3	In a common source stage as shown in Fig 1.3, assume $\frac{W}{L} = \frac{30}{0.18}$ and λ=0. The drain current is 0.5mA; compute the voltage gain. 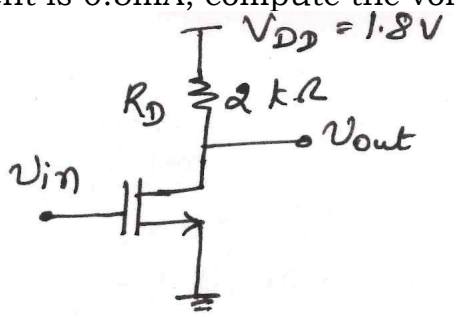 Fig 1.3	02
	1.4	A bipolar transistor operating in active region has a collector current of 1mA. Assuming $\beta = 100$, $V_T = 25mV$, determine the value of transconductance and input resistance (r_π).	02
	1.5	How g_m is affected if the quiescent collector current I_C of a BJT is increased by changing resistances?	01
	1.6	A Wilson mirror uses identical MOSFET with $V_{OV} = 1.0V, V_A = 20V$ and $V_t = 0.6V$. The minimum V_o allowed is _____.	02
	1.7	A MOSFET has $C_{gs} = 80fF, C_{gd} = 40fF$ and $g_m = 10mA/V$. The unity-gain frequency of the device is _____.	02

1.8	In the current mirror shown in Fig. 1.8 both the transistors are matched. Calculate R and output resistance of the current source. Given: L=0.5μm; $W = 5\mu m$; $V_t = 0.5V$; $k_n' = 250\mu A/V^2$; $V_A' = 20V/\mu m$. 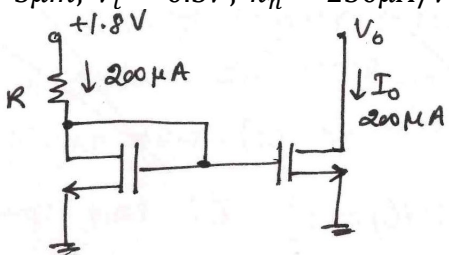 Fig. 1.8	02
1.9	An op-amp having a slew rate of $3V/\mu s$ is used as a non-inverting amplifier with a gain of 10. If this has to amplify a sinusoidal signal of angular frequency of 10^5 rad/s without any distortion, calculate the maximum allowed peak value of the input signal.	02
1.10	An op=-amp has an open loop gain of 999 and an output impedance of 4kΩ. If the op-amp used as voltage follower, compute the output impedance of the voltage follower.	02
1.11	An op-amp has it's $f_T = 10\,MHz$. The 3dB frequency of a closed loop amplifier with gain of -4, using this op-amp is_____.	02

PART-B

2	a	Design the common-source amplifier as shown in Fig. 2.a for a voltage drop of 200mV across R_s. i) Calculate the minimum allowable value of W/L if MOSFET has to remain in saturation. ii) Compute the required values of R_1 and R_2 if the input impedance required is atleast 30kΩ. 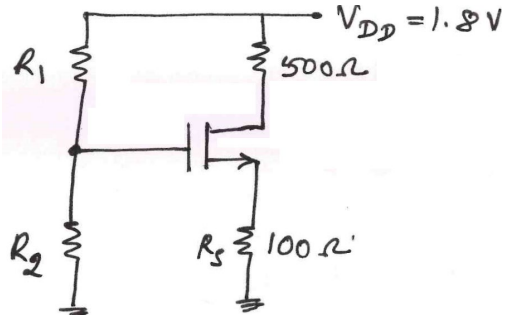 Fig. 2.a	06
	b	In the circuit shown in Fig. 2.b, calculate the values of V_1, V_2 and V_3, assuming the transistors are identical. $k_n'W/L = 4mA/V^2$; $V_t = 1V$. 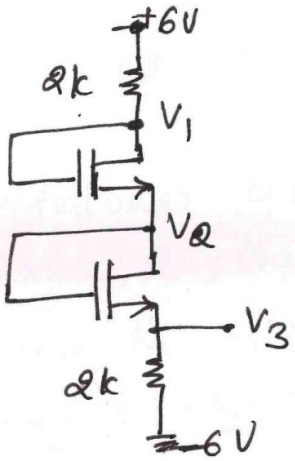 Fig. 2.b	10

3	a	Sketch the small-signal equivalent of the circuit as shown in Fig. 3.a and obtain the expression for the voltage gain. 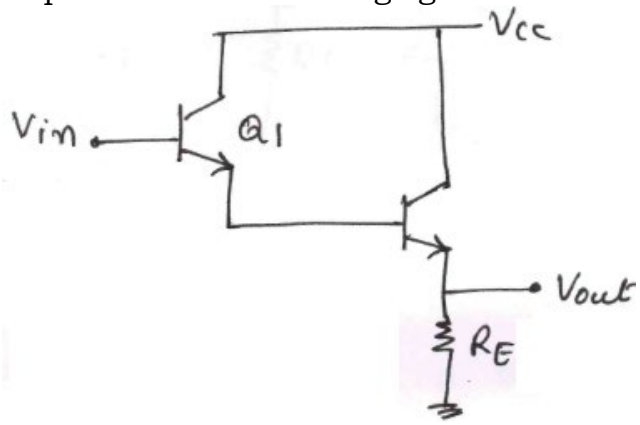 Fig. 3.a	06
	b	Design a CE amplifier circuit using a S_i NPN transistor with a voltage-divider biasing to have the operating point at $V_{CE} = 5.8V$, $I_E = 1.5mA$ with $S(I_{CO}) = 20$ and the small-signal voltage gain=-125. Assume $V_{CC} = 16V$ and transistor $\rho = 79$ and $r_0 = 20k\Omega$. For the designed circuit determine the input and output impedances.	10
		OR	
4	a	In the emitter follower circuit of Fig.4.a determine the input impedance,R_i, the voltage-gain, V_0/V_s and the output impedance,R_O. Given the transistor is biased in the active region with an $I_E = 1.3mA$, $\beta = 99$ and $r_0 = \infty$. 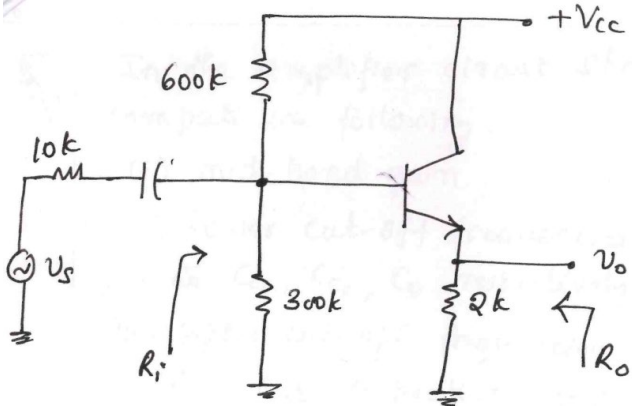 Fig.4.a	12
	b	Determine the value of V_{CC} for the circuit shown in Fig. 4.b, if the base current of S_i transistor=$10\mu A$ 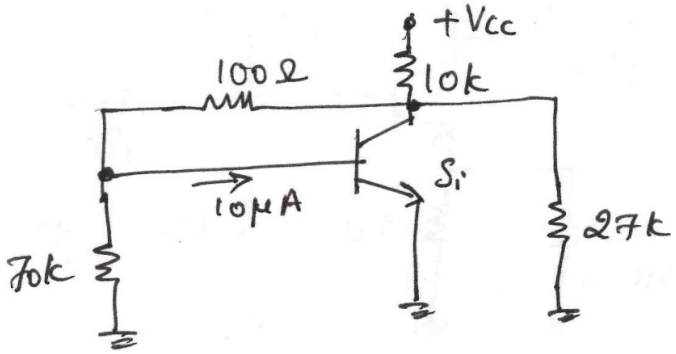 Fig. 4.b	04

5	a	In the amplifier circuit shown in Fig. 5.a, compute the following: i) Mid-band gain ii) Lower cut-off frequencies: f_{L1}, f_{L2}, f_{Le} due to C_{C1}, C_{C2}, C_E respectively. iii) Upper cut-off frequencies: f_{Hi}, f_{Ho} due to C_{in}, C_{out} respectively and iv) Bandwidth of the amplifier. The transistor is biased at $I_c = 0.65mA$, $\beta = 99, C_{be} = 40pF,\ C_{bc} = 20pF$ and $r_0 = 50k\Omega$. 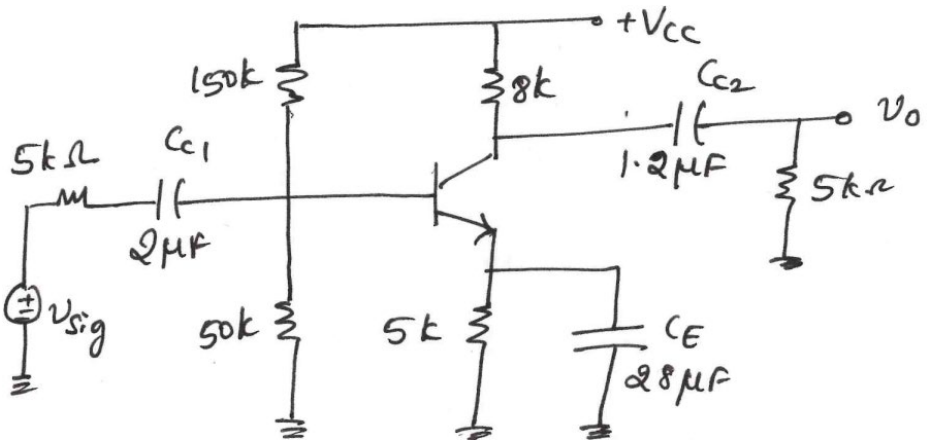 Fig. 5.a	10
	b	Derive an expression for output impedance of a NMOS Wilson current mirror.	06
		OR	
6	a	In the circuit shown in Fig. 6.a determine I_0, V_{G2}, V_{G3} and the lowest possible value V_O. Find the values of g_m and r_0 for all the three transistors and output impedance R_O. 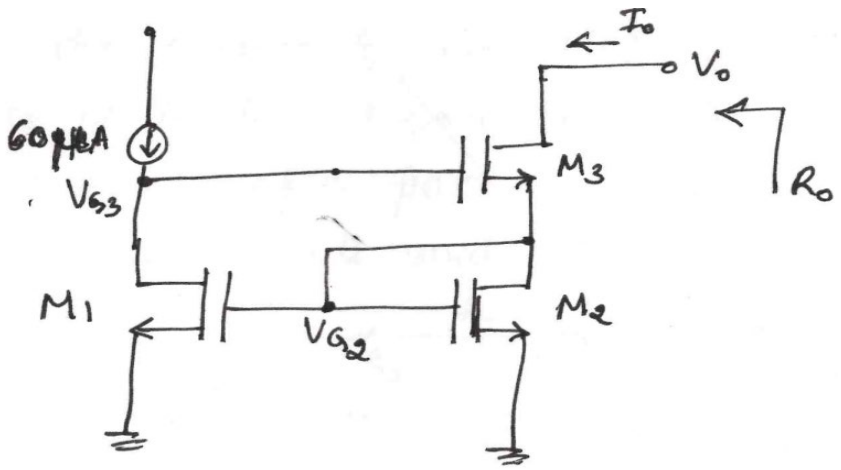 Fig. 6.a Given $\left(\frac{W}{L}\right)_1$=20, $\left(\frac{W}{L}\right)_2$=5, $\left(\frac{W}{L}\right)_3$ =40, $k_n' = 100\mu A/V^2$, $V_t = 0.8V$ and V_A=20V.	10
	b	Draw the circuit diagram of Wilson current mirror using bipolar transistor and show that the output current is given by $\frac{I_{ref}}{2+\beta^2}$ and output impedance is given by approximately $\frac{\beta r_0}{2}$. Assume that the transistors are identical.	06

7	a	The op-amp shown in Fig. 7.a has an input impedance of 200kΩ, output impedance of 10kΩ and an open-loop gain of 1000. Determine $\frac{V_o}{V_S}$, input and output impedances using feedback theory. 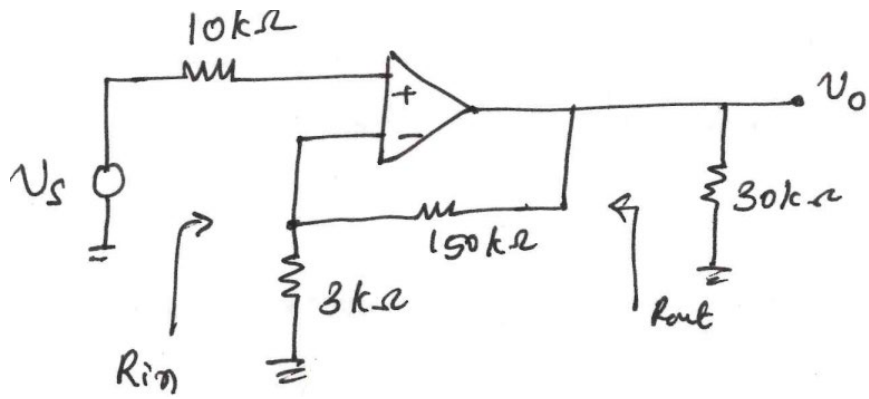 Fig. 7.a	08
	b	Draw the circuit and explain the operation of full-wave precision rectifier using two ideal op-amps.	08
8	a	A power transistor for which TJ(max)= 180℃ can dissipate 50W at a case temperature at 50℃. If it is connected to a heat sink using an insulating washer for which the thermal resistance is 0.6 ℃/W, what heat sink temperature is necessary to ensure safe operation at 30W? For an ambient temperature of 39℃, what heat sink thermal resistance is required?	08
	b	Derive the expressions for input and output resistance R_{if} and R_{Of} for voltage-series feedback amplifier with a feedback factor β.	08